ROBUR
caring for the environment

Air conditioning systems with gas absorption heat pumps

Natural gas/LPG fired

Gambro Dasco S.p.A.
Medolla (Modena), Italy

A unique combination

It's not easy to find thermal storage systems combined with absorption chillers. The main reason is the incompatibility of lithium bromide absorption chillers and outlet temperatures below 0 °C. The situation of water-ammonia absorption chillers is considerably different: actually, the temperature of the antifreeze (water-glycol) solution can go well below 0 °C, which allows full compatibility with thermal storage systems.
The application described below is a good example of thermal storage coupled with water-ammonia absorption chillers. In this particular case the utilisation of variable phase storage systems, it's even more attractive than standard ice storage. The installation of such a system in a small sized office building demonstrates the huge potential for the construction industry.

Gambro Dasco S.p.A., Italy

BUILDING DESCRIPTION

Floors	nr. 2-floor building: ground level and first floor
Surface	2512 m^2
Heating capacity	291.3 kW
Cooling capacity	190.8 kW

Absorption with thermal energy storage

Although uncommon when applied to absorption refrigeration systems, the use of a thermal storage system can lead to considerable energy savings and gas emission reductions, as experienced by this medical equipment company.
The expansion of the medical equipment company Gambro Dasco S.p.A., generated the opportunity to install a new cooling & heating system, which could guarantee the needed comfort level.
The system was designed with care considering high efficiency, energy savings and low environmental impact.
This is the proof of the social and environmental corporate responsibility that justifies a higher initial investment.

The application

The HVAC system, installed at the Gambro Dasco S.p.A. factory in the city of Medolla (Italy), serves a 2-story building, including offices and conference rooms.
The 1269 m^2 ground floor and the 1243 m^2 first floor, cover a combined area of 2512 m^2, while the average floor height is about 3.2 m.
The company has approximately 105 employees: 55 of them usually work on the ground floor, 50 of them on the second floor.

The Cooling/Heating System

The HVAC system of the conference rooms combines a primary air system with fan coils. In particular, the primary air system consists of an air treatment unit combined with ductwork and diffusers, customized for the building; air treatment unit and fan coils are directly linked (by means of a hydronic loop to the outdoor thermal system.
In the offices, heating and cooling is provided by fan coils connected to the same hydronic loop.
Besides the HVAC system, an on-demand water heater system coupled with a plate heat exchanger produces hot water for sanitary use.
The building requires a heating capacity of 197 kW and a cooling capacity of 285 kW.

Installed equipment

The outdoor thermal station consists of a gas fired water-ammonia absorption system, manufactured by Robur and composed with different models, as follows:

- 1 factory-assembled absorption heat pump link RTAR300-600 CC (nr. 5 GAHP-AR units);
- 2 factory-assembled absorption chiller links RTCF180-00 LB (nr. 6 ACF60-00 LB units);
- 1 factory-assembled link (specifically configured for this application) consisting of 2 absorption chillers ACF60 HR (with heat recovery) coupled with 2 high-efficiency outdoor heating modules (boilers) AY00-119.

The outdoor thermal station is integrated by an ice storage system, with 2 storage tanks

and a heat exchanger.
For the on-demand production of hot water for sanitary use, an additional plate heat exchanger was installed.

Energy Evaluation

The goal of obtaining the highest efficiency from this application was obtained by the installation of gas fired water-ammonia heat pumps and chillers manufactured by Robur. This gas absorption technology gives heating efficiencies up to 140% (according to Modena, Italy, average temperature conditions provided by UNI 10349) thanks to recovering heat energy from external air (renewable energy).
The number of heat pumps (GAHP-AR) is designed to cover the winter heating base load while the boilers (AY00-119) cover peak demand.
Thanks to an efficient application, 7927 m^3 of natural gas are saved during winter.
Moreover, in winter the application can lead to a considerable reduction of 14 Tons of carbon dioxide.
Similarly, further arrangements were implemented to allow the installation of a lower cooling capacity and provide energy savings in summer.
First, the installation of two thermal storage tanks with a capacity of 6500 litres of Polyolefin nodules (manufactured by Cristopia) filled with PCM, Phase Change Material. Thanks to this arrangement, only 133 kW by day mode and 88 kW by recharge mode have been installed, allowing savings of 64 kW on the installed capacity, 23% less than necessary.
Second, the installation of 2 absorption chillers with heat recovery, running by day mode. As a result, a gas inlet of 50.6 kW can generate 35.44 kW cooling capacity and 42 kW free heating output simultaneously, covering the needs of hot water for sanitary use. In summer, their combined efficiency can reach an outstanding rate of approximately 153%, improving the performance of the entire system.

How the system runs

In winter, only the GAHP-AR units and the AY00-119 high-efficiency boilers operate, supplying the fan coils, the air treatment unit as well as the plate heat exchanger for the hot water production.
The outlet temperature to the hydronic loop is 50 °C, with inlet water temperatures at 40 °C, and a combined heating capacity of 214 kW.
GAHP-AR gas absorption heat pumps, controlled by a Robur Direct Digital Controller (DDC) with five-step staging logic, shall have the right of priority during winter.
The two high-efficiency boilers, managed by another DDC, become operational in case of temperature or demand peaks, fitting into the system's sequence with two-step staging logic. The control panel integrating the 2 DDCs is managed by 2 on-off consent switches, driven by a 2-step thermostat. The thermostat switches on the heat pumps' DDC first, then the high efficiency boilers' DDC.
In summer, the process is characterized by a 2-phase operation: recharge by night and running by day.
Six ACF60-00 LB units are required to recharge the plant from 8:00 pm to 8:00 am.
The temperature of the water/glycol outlet is -7 °C, while inlet temperature is 2 °C.
Thermal energy is stored in storage tanks, containing the PCM nodules by means of phase changing of the nodules' fluid solidifying at a temperature of approximately 3 °C and is then released by day to the cooling system through a heat exchanger.
Normally, the cooling demand is entirely supplied by thermal storage tanks, in this case energy passes throughout PCM nodules.
When the demand of cooling energy raises, the gas fired aabsorption chillers switch-on, improving the total energy capacity. Finally, when the energy stored in the tanks is completely depleted, the absorption chillers will supply the entire air conditioning demand. When air conditioning runs on thermal storage only, the system works as follows.
Once air conditioning is switched on, the circulation pumps shift chilled fluid at 5 °C from the thermal storage system to the heat exchanger.
Then, energy passes through the hydronic loop to the air treatment unit and fan coils with a temperature of 7 °C.
When energy stored in the tanks is not adequate to satisfy demand, the absorption chillers become operational.
A thermostat-driven control panel switch as on the ACF60 HR units first, the GAHP-AR units second and finally, in case of high demand, the ACF60-00 LB chillers also.
ACF60 HR and GAHP-AR units directly connected with the air conditioning hydronic loop produce chilled water at a temperature of 7 °C while the ACF60-00 LB chillers connected with the storage tanks loop send chilled water at 5 °C to the heat exchanger.
Obviously, once the energy stored in the tanks has been depleted, the tanks are completely cut off and the absorption chillers provide the entire demand of thermal energy.
The electronic control manages the entire system automatically.
A multi-stage thermostat switches on DDCs with this priority: first ACF60 HR and GAHP-AR units, then the ACF60-00 LB units.
In summer, the 2 independent AY00-119 high efficiency boilers produce on-demand hot sanitary water.
However, when the ACF60 HR units become operational, hot water is produced by means of free heat recovery, avoiding unnecessary use of the boilers and boosting overall efficiency.

Conclusion

The utilization of thermal storage systems with absorption chillers is possible with water-ammonia absorption refrigeration systems, the only equipment providing antifreeze solution at a temperature below 0 °C.

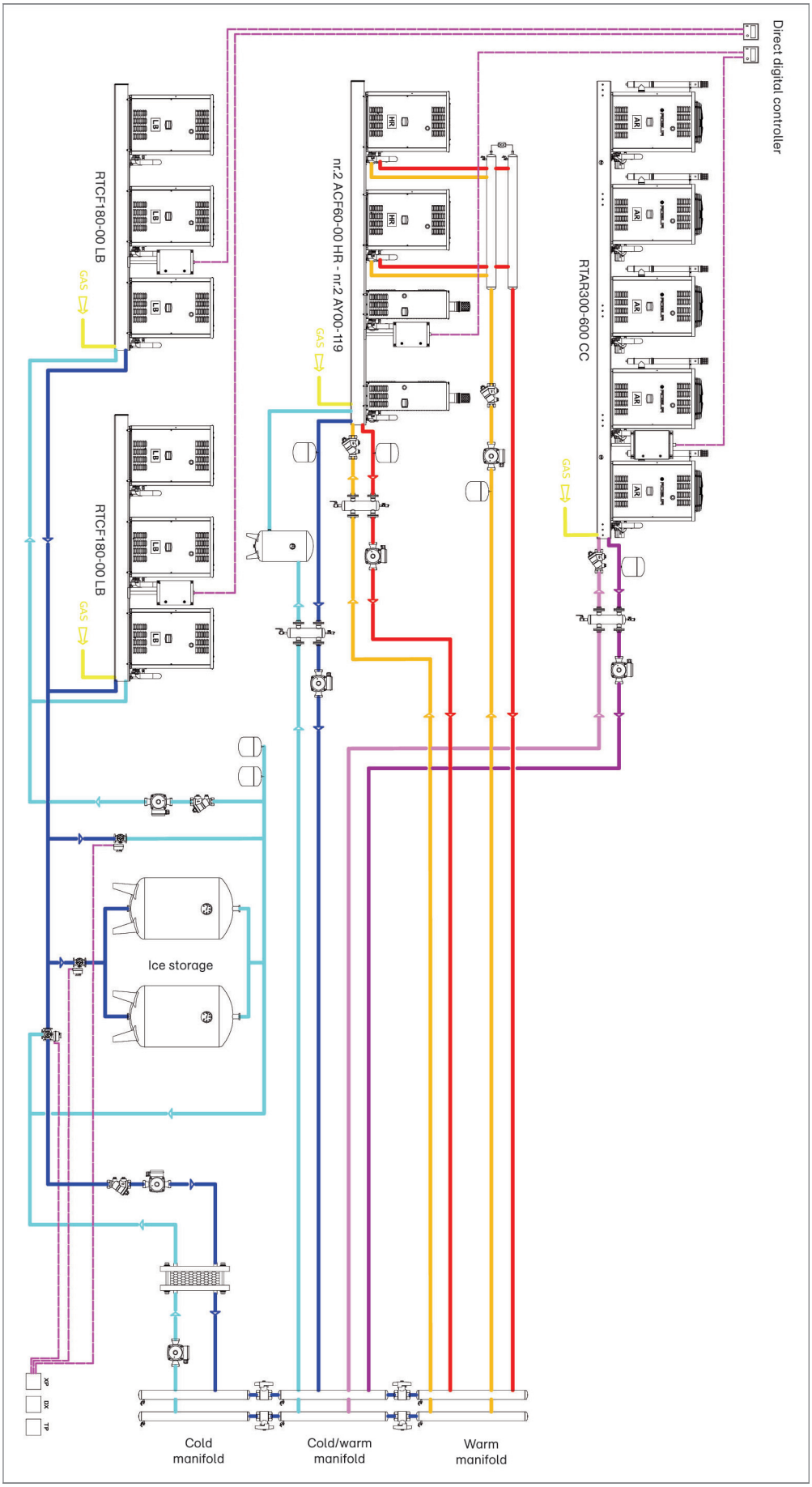
Direct digital controller
RTAR300-600 CC
AR
GAS
nr.2 ACF60-00 HR - nr.2 AY00-119
HR
GAS
RTCF180-00 LB
LB
GAS
RTCF180-00 LB
LB
GAS
Ice storage
XP
DX
TP
Cold manifold
Cold/warm manifold
Warm manifold